**Friedrich Kollenrott** **(translation: David Rekowski)**

# Sharpening burnished scrapers (2021)

## with reliably high quality and minimal effort

►► Would you like to try using a card scraper (that piece of sheet metal with the nastily sharp burr) in your woodworking endeavors? Know you need to sharpen them but don't know how to go about it?

►► Or: You know how to and regularly sharpen your scrapers but feel like there's still room for improvement?

Be that as it may: you're looking for a good method to sharpen scraper blades. One that above all yields a reliably sharp burr that works perfectly. And the effort, especially in terms of time it takes, should be low while it should not be unnecessarily involved or difficult.

The times when any cabinet maker or jointer could have helped with that are long gone. Today, the use of scrapers in demanding work takes place almost exclusively in the realm of amateur woodworkers as is the case with most traditional hand tools. The main source of information for these craftsmen and -women is the Internet. The right search terms produce an abundance of result pages, first and foremost a host of videos of varying quality where a confident and motivated young man (and it's always men) shows in a few minutes how to sharpen a scraper. Some do that very well.

Does that mean that after consuming a few videos and imitating the process shown you'll be ready to go? Not quite. A video can be a good introduction or source of motivation to give it a shot but it shows just one of many ways to get a sharp scraper. To make matters worse in-depth questions like "is it better to file or hone the edge before turning a burr?" or "What happens if you burnish the scraper at a different angle?" go unanswered.

If you're just imitating what was demonstrated in a video, but are otherwise clueless, you're really still in the dark. The result you get is a matter of luck. Judging the quality of the resulting edge and your systematic improvement is not possible without a deeper understanding. You just muddle through, not a great place to be.

Therefore I endeavor to explain in this sharpening instruction firstly what a scraper is and what makes it so special. How it cuts a shaving and why it can do so without any tear-out even in difficult grain.

Building on this basis, it will be much easier to explain the actual sharpening process. Techniques and auxiliary equipment as well as variants are covered in detail. Further topics include how to make custom scrapers and which type of steel to use.

Granted, it is more than what may be necessary in order to sharpen a scraper, but it is helpful when going about getting experience and adapting this method to arrive at one’s own sharpening technique.

My thanks to Markus Busch for his support through many discussions, inquiries, technical advice and, where necessary, objections.

Most of all I thank my dear wife Ingrid for her support and patience while this instruction was written during the Corona pandemic of 2020/2021.

Schladen (Harz), October 2021

Friedrich Kollenrott

## Introductory notes

### Link:

The current version of this instruction (along with other sharpening instructions) can be found on the internet at

**https://sharp.wwwiki.org/**

or **https://www.fine-tools.com/instruct.html**

**Notes on technical terminology:**
I use a few terms that may not be customary which I consider useful for clarity. They are explained as they are used, but the most important ones up front:

- The functional burr of a scraper is called cutting burr (not just burr as in sharpening or filing residue)
- The cutting burr is created by burnishing the edge of a scraper
- The scraper has two narrow “edge faces” with two edges each
- If a scraper does not have been burnished to form a cutting burr, we will call it a burr-less or unburnished scraper

### Right-hander or left-hander:

I am right-handed as is obvious from many of this instruction's photos. I assume left-handers will know where and how to adapt as necessary.

## Table of contents

# 1 Foundations

## 1.1 What is a plane, what is a scraper?

To flatten and smooth wood, there are two kinds of single-bladed, traditional hand-tools: Planes and scrapers. They work in a fundamentally different way as will be shown. As for the scrapers, which are the topic of this tutorial, there are various types, differing in the shape of their bevel and cutting edge and whether or not the sharpening has included a special forming process ("burnishing") which creates the sharp cutting burr.

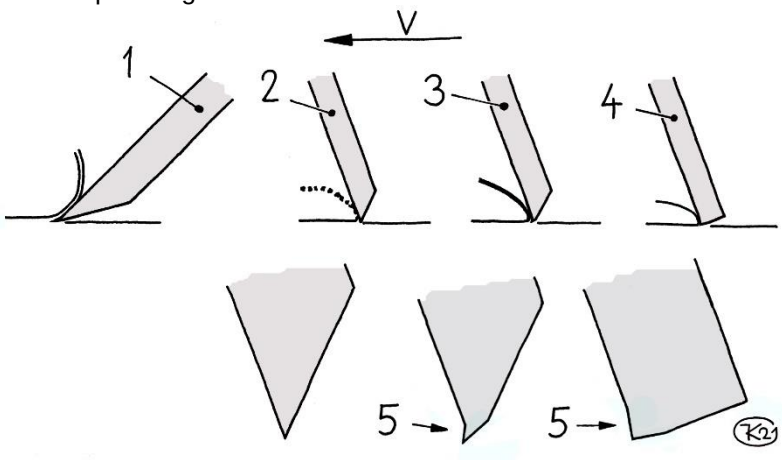


**Figure 1: Plane Blades and Scrapers**

1: Plane Blade

2: Acute- edged (45° or similar), un-burnished scraper; below: cutting edge, magnified

3: Acute- edged, burnished scraper; below: cutting burr, magnified

4: Card Scraper (90°- edge); below: cutting burr, magnified.

5: Cutting burr

v: Direction of motion

**Plane blades**
are inclined backward (in relation to the cutting direction) in use. They have to be fixed in a plane body and cannot be guided freehand. Their acute cutting edge is ground and honed. It cuts a thin, continuous shaving which is deflected by the rake face about 40 to 60 degrees, with an optional chip-breaker maybe even more.

A planed surface can be of superior quality (smoothness), but tear-out can't always be avoided when planing against the grain.

The thickness of the shaving corresponds with the protrusion of the cutting edge below the sole of the plane.

**Scrapers** (resp. the blades of "scraper planes")
are generally inclined forward and can be guided free-hand. Free-hand, the thickness of the shaving depends on the force exerted. If the scraper is fixed in a plane body, it depends on the protrusion of the cutting edge. The shaving is generally deflected more than 90°.

**The acute-edged un-burnished scraper:**
Its ground or honed cutting edge, with a typically 45° wedge angle, resembles that of a plane blade. But being **inclined forward** it cannot cut the way a plane does but rather scrapes off a thin layer of the wood. The scraped off wood forms a more or less continuous shaving which is deflected more than 90°. A scraped surface is not as smooth as a planed one, but is reliably free of tear-out.

**The acute-edged burnished scraper**
features a cutting edge that was finished by burnishing, i.e. forming a ground or honed acute edge into an extremely sharp hook- shaped cutting burr. Generally, it produces a better surface quality than the un-burnished type and continuous shavings. However, the characteristics of the cutting process depend on the widely variable geometry of the edge and the cutting burr (see **Chapter 2.2**).

**The card scraper (square edged and burnished)**
is the most common type. It has edges ground square (90°) and in this condition is incapable of scraping wood acceptably. Subsequent burnishing turns these edges into cutting burrs with still 90° wedge angle but one that is extremely sharp-edged and capable of scraping remarkably fine continuous shavings and smooth surfaces without any tear-out. The card-scraper is preferably used freehand.

**The two burnished types of scrapers are what this tutorial is about.**

The intentionally applied burrs that enable scrapers to work so amazingly should not be mixed up with the annoying burrs often occurring when metal is machined[1]. That's why I call them **cutting burrs** hereinafter.

[1] *Burrs form at edges of metal workpieces when machining and working them by sanding, milling, filing, etc, namely at the point the tool edge leaves the workpiece.*

## 1.2 Scrapers and scraping planes

### 1.2.1 Card Scrapers

This is the most commonly used type. At first glance just a sheet of spring steel[2] – you can't see the cutting burr, which turns it into an astonishing tool, but your fingers can feel it well. Commercially available card scrapers are rectangular, typically 150 mm (6") long and 0.6-1 mm (20-40 thou) thick. There are special shaped scrapers, often curved, but you can make any shape you need by yourself. Card scrapers don't come with a cutting burr, the user has to create that by themself. If a brand-new scraper feels like it has a burr it's formed unintentionally during fabrication and needs to be removed since it's not operational.

You can get handles for regular card scrapers that make it more comfortable to hold and use even when both edge faces have a cutting burr. This also helps if the scraper gets uncomfortably hot during use. I take it slow and do it a bit differently: I only sharpen one long edge and round over edges and corners of the opposing "grip edge" for more comfortable handling. The shaped scrapers I use are fairly long and narrow to be easier to handle during sharpening and in use. They have a drill hole to hang them and often another hole close to the cutting edge for better handling.

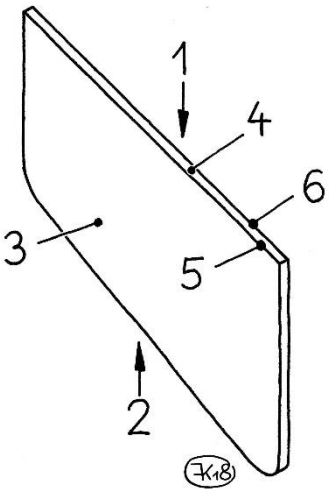


**Figure 2: Card scrapers for free hand use**

**Left:** Card scrapers (cutting edge towards the top)

Top: Regular card scraper

Bottom: Custom shaped scrapers

**right:** Parts of a Card scraper

1: Cutting edge

2: Handle edge, rounded over

3: Face

4: Cutting edge face, 90° to faces

5, 6: 90°- cutting edges (after burnishing: cutting burrs)

There are a number of hand-held tools with a handle that employ a trailing edge, Figure 3 depicts an example. The included blades have a ground, 45° edge and can be used with or without a cutting burr. With a burr it creates long, rolled up shavings and achieves a much better surface finish than without it, the difference is marked. Additionally, it's possible to take much thicker cuts than with a 90° card scraper. Handle and knob allow for applying the required force to do so.

**Figure 3: Scraper with handle** (Veritas)

Cutting direction: towards the left in the picture; bevel up

*The tool works great, but the blades are small and fiddly to sharpen. The blade shape isn't simple to reproduce either.*

[2] *Spring steel is medium hardened (a file still cuts it), heat-treated steel, more on that in* ***Chapter 7.2***

### 1.2.3 Cabinet scrapers and scraping planes

These tools have a sole which glides on the wood. The blade, tilted towards the front, is clamped in place by screws. The cutting edge is acute and can be used with or without cutting burr. Contrary to the hand-held card scraper, the angle is determined by the bed of the tool which may be adjustable. The thickness of the shavings is set by the protrusion of the blade below the sole.

There's usually a screw that is used to bend the thin blade in the middle, in order to fine adjust the shaving's thickness and create a slight camber to feather in the cuts so as to not leave visible steps in the surface.


**Figure 4: Cabinet scrapers and scraping planes**

**Top: Cabinet scraper** (Stanley #80)

Short sole, fixed bedding angle, blade thickness about 1.5 mm (1/16").

The blade has no special shape, it's just big and rectangular, it's expedient to burnish it

**Bottom:** Scraping plane (here: Veritas)

Similar to a metal smoothing plane with a long sole. The bedding angle is adjustable. There are thinner (bendable) and thicker blades for this type of plane.

*This is an example, there are different models by different makers.*

I never really got the hang of these. To me the problem seems to be this: it counteracts the astonishing property of a card scraper to automatically find the ideal thickness of the shaving depending on the applied force (see **Chapter 2.1.3**, here for 90° blades). Same with not being able to sense the optimal angle because the scraper is fixed relative to the workpiece. It's crazy how much better a 45° blade with a burnished burr works in a handled scraper (**Figure 3**) compared to a blade sharpened identically but used in a cabinet scraper(**Figure 4**, top).

I do own a cabinet scraper and use it with acute edged burnished blades. It's useful to work big surfaces like table tops and it does so at a decent stock removal rate. But it doesn't work as convincingly as a common, hand-held 90° card scraper. I have tested a scraping plane (**Figure 4**, bottom). Overall, compared to a like-sized bevel up smoothing plane, which takes similarly fine shavings, it doesn't come off well in my experience. Maybe I have given up too quickly, though.

# 2 The cutting burr – and how a shaving is severed

## 2.1 Card scrapers

### 2.1.1 Burnishing[3]

The cutting burr of a card scraper is produced by forming a square edge. This may be less intuitive and may take some getting used to for woodworkers sharpening only with abrasives. Apparently it does stimulate creativity, though: old and new textbooks, commercial suppliers and more or less qualified videos on the internet, they all demonstrate and recommend different methods and means.
What to pick? Decisions for the novice user (and therefore sharpener) of card scrapers or anyone looking for a better method of sharpening. Should the burnisher be cylindric or triangular? Is burnishing both[4] the face and edge face better or only the edge face? Can I go over each edge multiple times with the burnisher or is that completely wrong?

For my part, I learned about 60 years ago from a book how to form the cutting burr with a round burnisher just on the edge face (as shown in **Figure 5**). I have stuck to this principle of operation, but improved and standardized it over the years. The sharpening effort is fairly low and the performance characteristics of card scrapers sharpened this way have been confirmed. Therefore I recommend and continue with:

**One-sided burr-forming with a cylindrical burnisher[5].**

**Initial state:** The scraper has cleanly honed 90° faces. The burnisher is hard and finely honed in order to not abrade shavings from the scraper.
**Forming the burr:** The burnisher is tilted in relation to the edge face plane by the "burnishing angle" λ (lambda) and pushed or pulled, sliding, along the edge in which it is pushed down on the edge. **Done.**

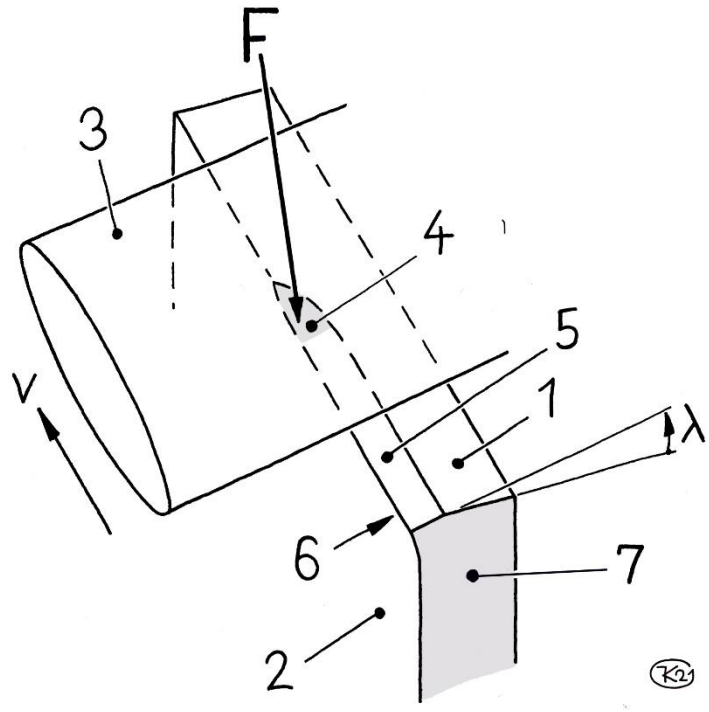


**Figure 5: Forming the cutting burr**
(not to scale!)

1: Edge face
2: Face
3: Burnisher, cylindric
4: Zone of current plastic deformation
5: Burr bevel
6: Cutting edge
7: End face
F: Pushing force (pushing the burnisher onto the edge face)
v: Direction of motion
λ: Burnishing angle **(I use: 10°)**

*Usually, the opposite edge is likewise supplied with a cutting burr.*

*The diameter of the burnisher is mostly much bigger than indicated here, which is about 10x the thickness of the scraper!*

---

[3] *The burnishing process dictates the form and therefore the function of the cutting burr. Consequently it has to be covered here, prior to the other steps of sharpening.*

[4] *About "burnishing both adjacent faces" see* ***Chapter 7.4.***

[5] *The following describes what happens at and the experiences with* ***card scrapers burnished in this manner****. How this differs from if it is formed any other way I have not examined, but I wouldn't expect significant differences.*

### 2.1.2 After burnishing: cutting burr and cutting edge of the card scraper

After pushing the burr you can see with the naked eye – but naturally better with a magnifying glass – the about 0.1 to 0.2 mm (1/16”) wide, shiny burr bevel at the edge of the edge face. It’s also visible and tangible that the cutting burr protrudes from the wide scraper faces.
The deformed structure featuring the very cutting edge is the cutting burr. It’s profile (cross section) and nature of the cutting edge are not visible to the unaided eye. It’s necessary to know how it looks, though, in order to be able to understand how a card scraper and the process of sharpening it works.

To expose the profile of the cutting burr, I filed off the very ends (a few 1/10 mm or ~1/16”) of the edges that may have been deformed where the burnisher touched or left the steel. I also honed the end face on my bench stones and polished it with compound to make it smooth and remove any burr. What my pen microscope told me I was able to document using a simple digital microscope.

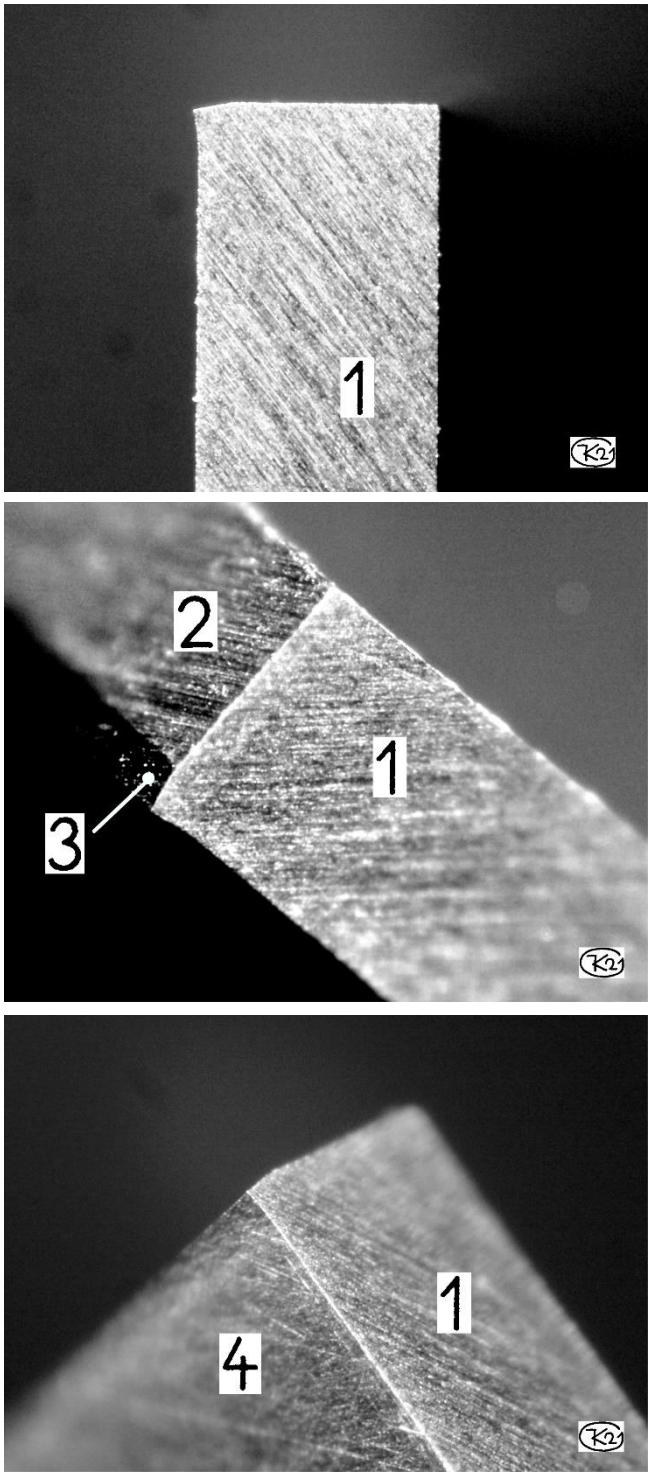


**Figure 6: Cutting burr and cutting edge of a 0.8 mm (1/32”) thick 90° card scraper, one edge burnished**

1: End face

2: Edge face

3: Burr bevel

4: Face

**Top:** That’s all there is! Clearly visible: When burnishing it, the edge (left) of the edge face is bent down towards the face of the scraper by the burnishing angle. The 90° angle of the original edge is maintained, now a 90° cutting edge. The cutting burr, protruding from the face is formed from that face and the burr bevel. Its cross section is a tiny, very shallow right-angled triangle. A further protruding **acute angled** cutting bevel can not be observed.

**Center:** (perspective similar to **Figure 5**): Same here: clearly a 90° cutting edge, nothing more.

**Bottom:** View towards the scraper face, no acute angle is visible.

*No doubt: a pushed out, thin, hook-like burr we are familiar with from common descriptions and diagrams[6] doesn’t exist.*

*It was also my belief. I couldn’t see it under magnification but assumed the tangible, aggressive sharpness of the cutting burr would not be possible without an acute angled cutting bevel. I assumed it was there, but very minute. How doggedly we trust what we want to believe...*

*Only with a good 100x microscope (with a better resolution than these mediocre pictures) I came to understand: my impressively sharp card scrapers just have a 90° cutting bevel – nothing else.*

[6] *Search for <cutting edge burr> (images). Or watch the video by Cosman (footnote [12]).*

Now we know the profile of the cutting burr and edge of a one-sided burnished 90° card scraper: the burr bevel is straight (formed by the burnisher), the edge has a 90° bevel and transitions from the rake face in a shallow arc to the face of the scraper.

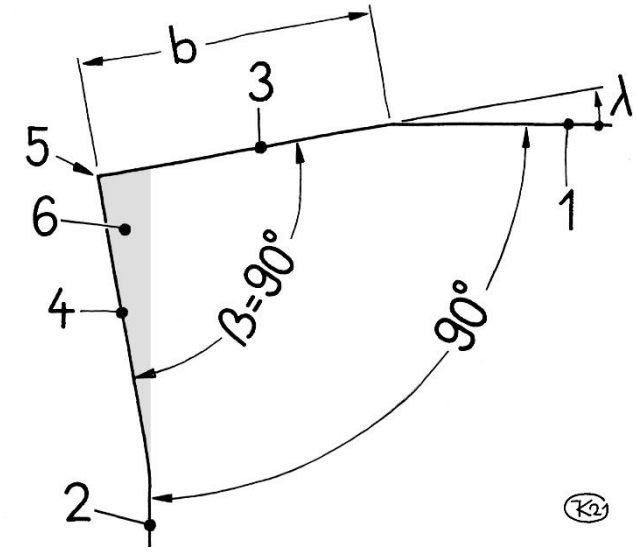


**Figure 7: Cross section of the cutting burr of a 90° card scraper**

1: Edge face
2: Face
3: Burr bevel
4: Rake face
5: Cutting edge
6: Cutting burr (gray)
b: Width of burr bevel (about 0.1-0.2 mm or ~1/16” depending on force applied)
β (beta): Cutting bevel
λ (lambda): Burnishing angle (I generally use 10°)

It is astonishing how much sharper the burnished 90° cutting edge feels and how much better it performs compared to a very carefully honed 90° edge (which inevitably will have a minimal round-over or a marginal sharpening burr). Burnishing minimizes the round-over (a zero radius doesn’t exist, though) and reliably removes any burr protruding from the clearance face of the edge (burr bevel). Both apparently results in the noticeably aggressive sharpness despite the large bevel angle of 90°.

### 2.1.3 Amazing: How the 90° card scraper cuts and operates

**The clearance angle:**

Card scrapers are angled towards the front (in the direction of the cut) as shown in **Figure 1**. The inclination has to be big enough that a narrow, wedge-shaped gap opens between the clearance face and the workpiece. The angle is the **clearance angle α**[7] and the burr bevel is the **clearance face** of the 90° cutting bevel:

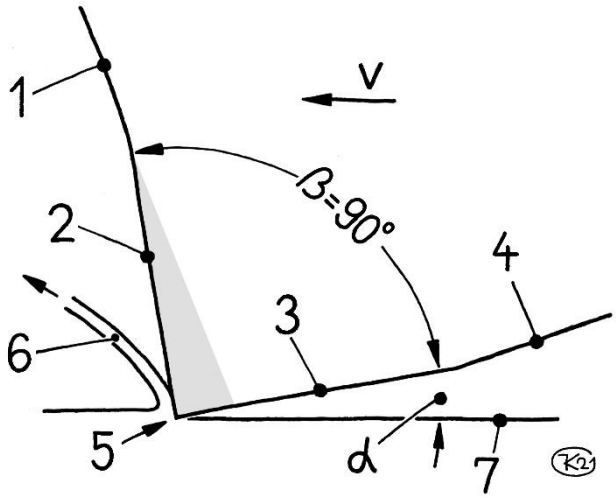


**Figure 8: Inclination of the rake face, contact of card scraper and shaving**

1: Face
2: Rake face
3: Clearance face (burr bevel)
4: Edge face
5: Cutting edge
6: Shaving
7: Scraped surface
v: Cutting direction
α (alpha): Clearance angle

When cutting a shaving (angled as shown in **Figure 8**), the card scraper touches the wood only at its rake face and it’s sharp rim, the cutting edge. Thus, the depth of cut is not restricted and the edge can take deeper or shallower cuts, varying the shaving thickness depending on the applied pressure (this will be further explained below).

As a consequence of the fact that the angle of the cutting edge is 90° and that there is a clearance angle, the rake face is also angled forward.

---

[7] *The clearance angle only needs to be so big that the clearance face doesn’t touch the surface of the wood even when it springs back minutely after the shaving is sheared off. If the angle is bigger, the rake face is angled unnecessarily far which hinders cutting and deflecting the shaving. That means the scraper should be neither angled too much nor too little. The “correct” inclination can be sensed tactually.*

## Shearing and deflection of the shaving:

The cutting edge of a 90° card scraper is not capable of cutting in the same way as the acute cutting bevel of a plane blade. Rather it **shears** the shaving: The rake face, close to perpendicular to the wood surface, compresses the shaving's cross section of the wood that is front of it in the cutting direction. Since the rest of the wood doesn't follow this deformation, the shaving is released[8].

The shaving compresses in front of the rake face and is deflected, within a smallest space, by more than 90°. This can only happen by force. And indeed, a lot of force has to be applied to compress the thin shaving and shear it off, to bend it and overcome the friction between shaving and rake face. This friction is considerable and can unpleasantly heat up the scraper when it is used intensively.

## Forces between shaving and rake face:

At the point where the front-leaning rake face and the shaving meet, a force pair ("action and reaction") is taking effect. $F_s$ acts on the shaving, $F_z$ on the rake face. Both forces are of the same magnitude and opposing as usual. The direction can be determined by the circumstances at the rake face: $F_z$ consists of a normal force (in the direction of the surface normal) and a tangential force acting in the direction of the friction force caused by the shaving gliding along the rake face and is therefore tilted significantly more from the horizontal than the surface normal – more so with an increase of the coefficient of friction[9].

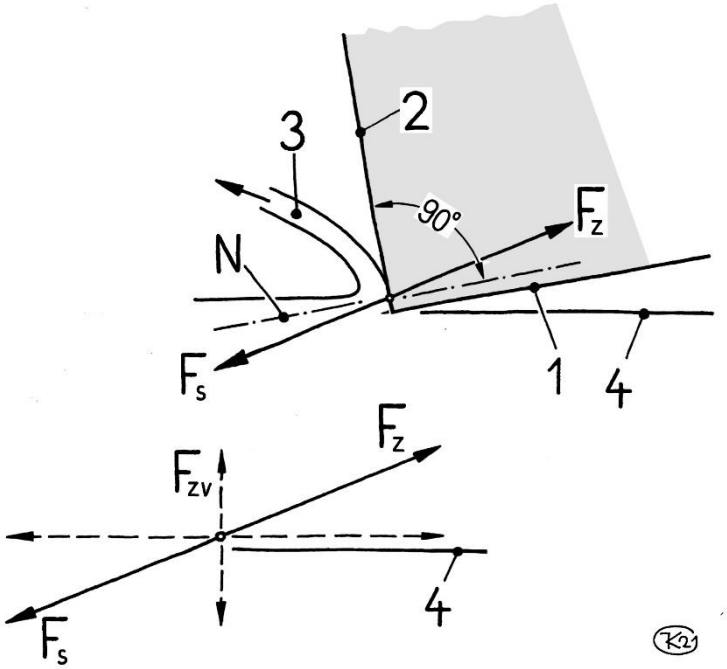


**Figure 9: Forces between shaving and rake face**

**Top right:** shaving, rake face and force pair

1: Clearance face (burr bevel)

2: Rake face, angled forward

3: Shaving

4: Resulting wood surface

$F_s$: Force acting on the shaving

$F_z$: Force acting on the scraper

N: Surface normal

**Bottom left:** forces separated into horizontal (parallel to the wood surface) and vertical components

$F_{zv}$: Vertical component of $F_z$

**The force $F_s$ acting on the shaving** doesn't only act towards the cutting direction (compressing the shaving), but also downwards pushing the shaving down. This way, even cutting against the grain, a splitting of the shaving down into the wood ahead, which would result in tear-out, is prevented[10].

## Shaving thickness:

**The vertical force component $F_{zv}$** would push the card scraper up out of the wood. To prevent that, the scraper doesn't only have to be pushed or pulled in the cutting direction, but downwards as well.

If the downward pressure equals $F_{zv}$, the forces are balanced and the thickness of the shaving doesn't change. If the pressure is increased, the cutting edge cuts deeper into the wood, the shaving gets thicker. Compressing and deflecting this thicker and stiffer shaving requires more force; $F_s$ and $F_z$ get bigger, provided the direction doesn't change. Therefore, with increasing shaving thickness, the vertical component $F_{zv}$ increases as well, until a new balance relative to the hand pressure force is established. If less force downwards is applied, this balance is reached at a thinner shaving thickness. This way, the thickness of the shaving is controlled by the applied pressure. If it gets too large, the shaving gets too thick and can therefore no longer be deflected. The card scraper stops and digs in.

---

[8] *The shaving doesn't spring back and is therefore much shorter than the top layer of the wood it once was, typically about half as long (and thus twice as thick). This can be demonstrated by putting pencil marks onto the wood, a defined distance from another.*

[9] ***Figure 9** shows the situation for an assumed coefficient of friction of (only) 0.2.*

[10] *With a plane, the shaving is lifted where it contacts the rake face.*

**Surface quality:**
The keener the cutting edge, the cleaner it will cut the shaving. A pretty shaving is nice, but useless. The objective is a smooth surface. Aside from the quality of the cutting edge additional factors play a role:

Shearing a shaving doesn't work well with very soft-fibered woods or any that have significant soft or spongy regions (e.g. soft woods with light early wood between the darker growth rings). Also, the force pushing down the shaving compresses the remaining wood which then springs back partially or completely, depending on the hardness and elasticity at each point. The result is an undulating surface, especially with soft woods where you can feel every growth ring. Hardwoods with homogenous structure are better suited to be smoothed with card scrapers.

The thickness of the shaving is also relevant: a thinner shaving requires less force and therefore less deformation of the wood and potentially better surface quality. In theory it's also beneficial to tilt the scraper only as much as necessary. The rake face is steeper, forces $F_s$ and $F_z$ act in a lower angle to the wood surface and the vertical components are smaller. How much difference does it make? I suggest: try it for yourself!

### 2.1.4 Variation of burnishing angle and pressure

**The burnishing angle λ:**
I use **10°** (15° only occasionally if I add a secondary bevel). This results in a consistently continuous burr bevel even when the edge slightly deviates from 90° (which is a given if you sharpen free hand) and the bevel is still small and can be removed without much effort in the next sharpening.
Bigger angles increase the required effort for sharpening and the angle the scraper needs to be inclined to for it to cut. It doesn't change the performance noticeably, though, since: **the 90° wedge angle stays the same.**

**Downward pressure:**
Even with surprising little pressure and a corresponding small (less than 0.1 mm/4 thou!) clearance face (burnishing bevel), a well working cutting burr can be achieved. With increasing pressure, the cutting burr increases correspondingly, i.e. the burr bevel and rake face get wider but **keep their 90° wedge angle**. At the point where the shaving is severed and deflected, the first few thou of the rake face (measured from the very cutting edge), there doesn't seem to be any change. I can't discern a clear difference in use.

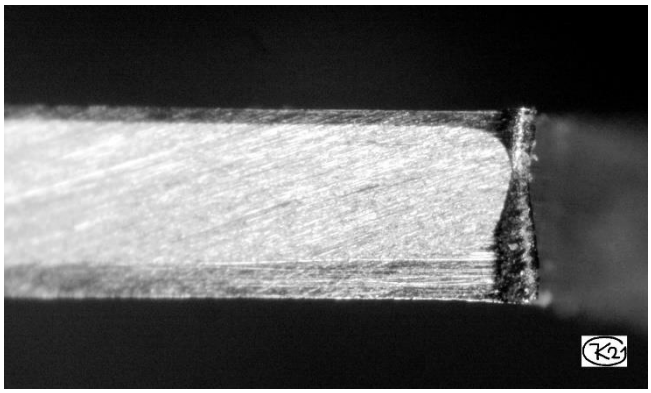

**Figure 10: Burr bevel with small and large pressure** (blade thickness 0.8 mm or 1/32", view from the top of the edge face)

**Top:** small burr bevel

**Bottom:** wide burr bevel

**Right:** deformation of the burr bevel toward the end face

*Both cutting burrs perform identically – but re-sharpening the wider (bottom) one requires more effort and time.*

## 2.2 Scrapers with acute wedge angle (45°)

This section will be short, since I use it only little and my experience is accordingly limited. However the conditions at the cutting edge are extraordinarily interesting.

### 2.2.1 The acute angle and its cutting burr

A scraper with an acute wedge angle does not have an edge surface (as 90° card scrapers) but a bevel like a plane blade. Therefore you can only apply one cutting burr, not two. The common 45° angle is where the name comes from (in this instruction) but it's not required, any edge angle between 90° and (presumably) 30° can form a working scraper.

Likewise, the burnishing angle λ can be varied. A sensible range should be between 0° and 40° (see **Figure 11 below** for a definition of the burnishing angle)

Similar to the 90° scraper, burnishing the honed edge of the cutting edge bends it.

However the acute and therefore pliable edge of the scraper blade is bent into a shape resembling a beak. The burr bevel close to the cutting edge is convex with the rake face distinctly concave. The wedge angle β at the cutting edge corresponds (as with the 90° scraper) to the edge angle ϑ of the edge prior to burnishing.

### A well-tried example: edge 45°, burnishing angle 10°:

This is how I sharpen the blade of my scraping plane and cabinet scraper (both Veritas).

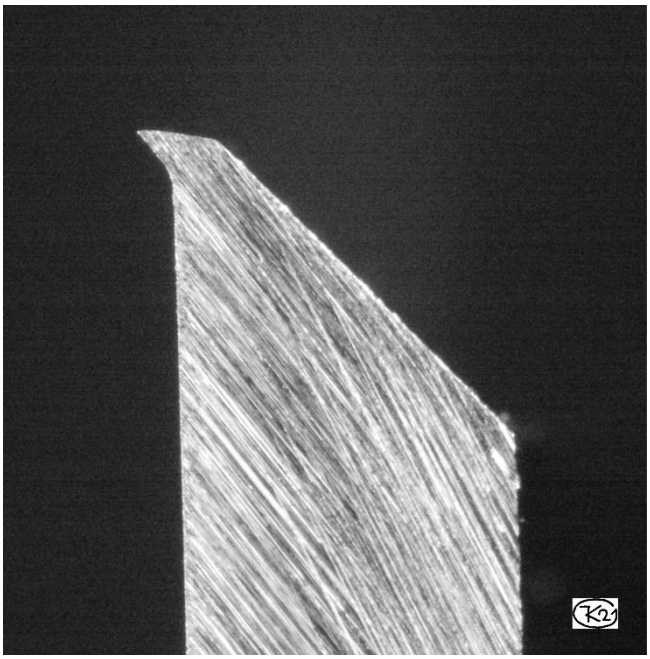

**Figure 11: Cross section of the cutting edge with burr**

**Top:** photo

Blade: 1.5 mm (1/16”) thickness
Edge angle: ϑ = 45°
Burnishing angle: λ = 10°

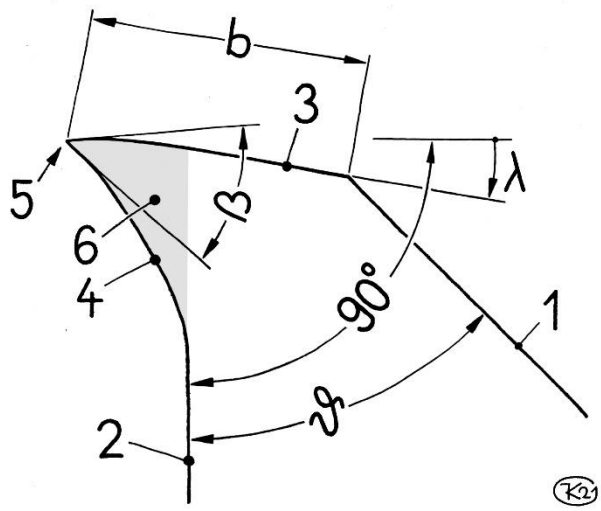


**Bottom:** cross section

1: Bevel (smoothed)
2: Face (honed)
3: Burr bevel
4: Rake face
5: Cutting edge
6: Cutting burr (gray)
b: Width of burr bevel (0.2-0.3 mm or 8-12 thou)
β: Wedge angle of the cutting edge (= ϑ = 45°)
ϑ: Bevel angle (here: 45°)
λ: Burnishing angle (I usually use 10°)

### How does this 45° scraper cut when used in a cabinet scraper

In a cabinet scraper, as shown above in Figure 4, the blade has a fixed pitch. I have the Veritas one and measured the pitch ω (omega) at 24°.

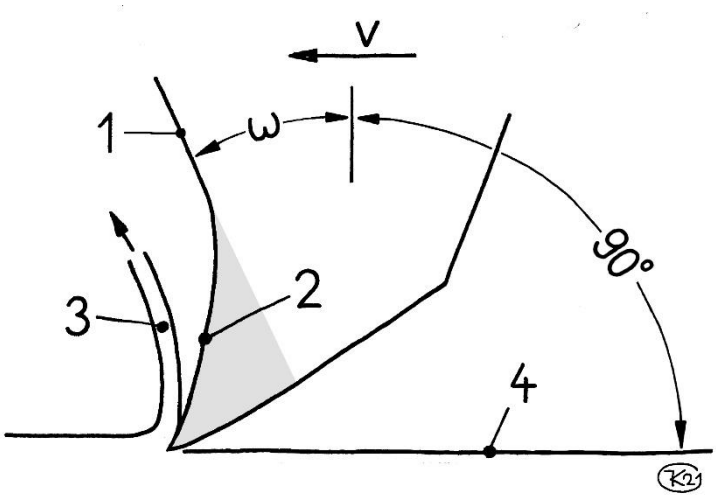


**Figure 12: Cutting process at the scraper blade from Figure 11 in a cabinet scraper (Veritas)**

1: Scraper face
2: Rake face
3: Shaving
4: Wood surface
v: Cutting direction
ω: Blade angle = 24°

The 45° scraper is vastly different regarding the cutting action compared to the 90° card scraper. The cutting edge is acute-angled, wedge-shaped and the rake face is inclined backwards. This results in circumstances regarding cutting and deflection of the shaving that are similar to a plane. Thicker shavings are possible at the cost of increasing the risk of tear-out.

It's possible to get closer to the geometry of a plane blade by reducing the bevel angle and burnishing angle.

Since the rake face is inclined backwards, the cutting force doesn't act upwards on the blade (even considering friction). That would be necessary to control the shaving thickness by the applied force[11]. Free hand, the blade would have to be inclined even more, which is possible with the tool shown in **Figure 3**.

[11] *see **Chapter 2.1.3**: Forces between shaving and rake face ff*

# 3 Sharpening scraper blades: foundations (before we get started)

## 3.1 How it should be

I was recently referred to the card scraper video of a well known Canadian YouTuber[12]. It is impressive and I'm sure he gets functional card scrapers with this method, but what an effort! Thankfully it can be simpler and faster.

Looking at the way a scraper works and examining the steps of sharpening, it's easy to see where it is worthwhile to spend the time and effort or not. Anything that does not evidently improve the quality should be omitted. The procedure should be standardized in order to get consistently good results (naturally not preventing anyone from always striving to improve).

A good sharpening method should be quick, straightforward and always guarantee an equally good quality of use for the scraper. Should an extraordinarily fine surface be required, it should be clear how to prepare the scraper for that with appropriate additional effort.

## 3.2 90°- card scraper

### 3.2.1 Don't file, grind!

To sharpen a card scraper (with one-sided burnishing of just the edge face) the existing cutting burr is completely removed and a fresh 90° edge is established. Then the new cutting burr is burnished. I only use a bench stone and honing stone on the edge face; a file to flatten the edge face (instead of grinding or prior to it as often shown) I don't need. It's not necessary, a good stone like my 1000 grit Shapton does that well on its own and it takes about half a minute[13].

### 3.2.2 How fine does the 90° edge have to be before burnishing it?

Any cutting edge consists of two surfaces meeting at an (usually) acute angle as keen as possible, ideally (in theory) without any round-over. The cutting edge of a plane blade is ground and honed on both faces (bevel and mirror face) to an equally high quality on a fine stone.
With a card scraper, the 90° edge formed by the face and edge face is first ground and honed. How high does this honing need to be?

#### Treatment of the edge area of the scraper face

This surface will be bent slightly when burnishing and creates the rake face. The burnisher doesn't touch this surface, its structure is retained. Therefore it should be honed well in order to achieve a keen cutting edge. The effort is minimal: the old cutting burr protrudes from the face, the amount of material is minute. With a fine stone, it can be removed within seconds by registering the scraper face on the stone and grinding until the face is completely flat once more. In place of the cutting burr, we now have an untarnished, fresh edge surface. Perfect!

#### Treatment of the edge face, forming the burr bevel

There is more material to remove from the edge face in order to remove the previous burr bevel. That would take too long with just a fine honing stone. The right tool is a bench stone (e.g. 1000 grit). Is it necessary to hone the edge face afterwards? The area close to the cutting edge will be smoothed by the burnisher anyway, but is it enough?

The flattening works like this: The burnisher glides along the face and is pushed down, plastically deforming the elevations of the roughness profile. The peaks are flattened, broadening and more or less filling the adjacent recesses. The less rough it is prior to burnishing and the more force is applied to the small area the burnisher touches the scraper in, the better the surface will be consolidated, closed and the more complete the original ground surface with its parallel ridges disappears.

The burr bevel on edges that have only been ground seem flat and polished to the naked eye. They are not perfect, though, as the microscope reveals: the grinding roughness is transferred into the flattened surface, the equalization is incomplete:

---

[12] https://www.youtube.com/watch?v=aRymcqhZnDo *(Rob Cosman)*

[13] *The (mis-)conception a file is required to sharpen a scraper correctly may be a remnant of times where bench stones of the high quality we're used to today weren't as easily available.*

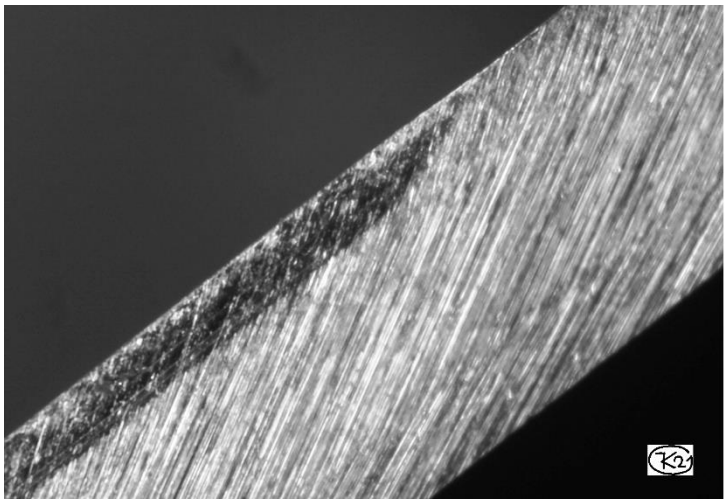

**Figure 13: Ground edge face with burr bevel (see Figure 5)**

Card scraper thickness: 0.8 mm (1/32“)

Burnishing angle: 10°

Stone: Shapton 1000

Scraper steel: solid carbide, finely honed

*This image intends to depict the incomplete flatness: the burr bevel clearly shows remaining structure from grinding. Judging the surface quality is not possible – slightly altering the lighting changes the appearance of the bevel almost arbitrarily.*

If the edge face is honed before burnishing, it will still not be perfect under the microscope, but flattened significantly better. In direct comparison when used however, I could perceive **no difference** between using a card scraper with honed or just ground edge face.

**Therefore, for minimal effort:**

**The face** of the card scraper should be honed.

**The edge face** only needs to be ground[14] on a bench stone, since burnishing with a good(!) burnisher will flatten the cutting edge sufficiently.

### 3.2.3 Order of grinding and honing

The correct order of grinding and honing can also help reduce the sharpening effort.

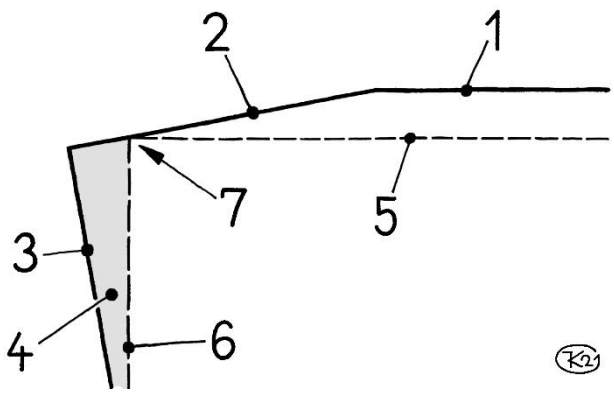


**Figure 14: Honing of a new edge with minimal metal removal**

1: Old edge face

2: Old burr bevel

3: Old rake face

4: Old cutting burr

5: New edge surface (at minimal metal removal)

6: Area close to the edge after removing the cutting burr

7: New 90°- edge

The image shows: minimal removal at the edge face would leave a small piece of the burr bevel. If you grind the edge face first you will only stop once the burr bevel is removed completely (since there is no other criterion). At this point, more material than necessary has been removed.

Better to start with removing the cutting burr in order to require the least metal removal when grinding the edge face afterwards.

The following order is **technically advantageous and never adverse:**

- **First** the faces are ground flush (card scraper lies flat on the bench stone).
- **Then** on to the edge face, which is ground until the burr bevel completely disappears.
- **Lastly** the faces are briefly honed on a whetstone to remove any fine grinding burr.

---

[14] *This saves a significant amount of time, since honing can be skipped and sharpening is simplified: it’s possible to sharpen free hand (see **Chapter 4.1**.), which is especially fast. Honing would require a precise guide on the bench stone as well as on the whetstone.*

### 3.2.4 Burnishing

is the work step that takes the least time and has the least influence on the quality. The steel just needs to be good. I do a single burnishing pass as essentially shown in **Figure 5**.

### 3.2.5 The result: "standard quality"

A card scraper sharpened thusly has a respectable quality of use with minimal sharpening effort:

**Figure 15: Shavings from a well sharpened card scraper**

Face honed at 6000 grit, edge ground to 1000 grit on the bench stone.

Burnisher material: solid carbide

Burnishing angle: 10°

Wood species: birch

Sharpened in under 3 minutes

(at my sharpening station where everything I need is at hand)

### 3.2.6 As needed: better quality with (a little) more effort

Anyone requiring an even better surface quality will have to put some more effort into sharpening. It's always about improving the quality of the cutting edge and/or facilitating the deflection of the shaving by reducing the rake face's roughness.

#### <u>Option 1:</u> further improving the face and subsequently the rake face:

**Either by using a finer stone:**
Instead of a 6000 grit Cerax I use a Naniwa 8000 which results in a much finer surface, less so due to it's higher grit but because it has a polishing effect.

- **Additional effort:** small, takes a bit longer to remove the cutting burr with the finer stone.
- **Result:** Noticeably finer, smoother shavings (in my perception).

**Alternatively by flattening with the burnisher[15]:**
The scraper is prepared as usual for burnishing, the face treated with a 6000 grit stone. Then the card scraper is laid flat on a hard base and polished at the edge of the face with the burnisher[16]. The burnisher needs to lie flat on top of the scraper (in order to **not create a bevel** at the edge!), but pushed down in a way that increases the force towards the edge. The smoothing is noticeable.

Afterwards, the cutting burr is burnished as usual.

- **Additional effort:** small, a few seconds for burnishing the face
- **Result:** In my perception finer, smoother shavings are achieved.

#### <u>Option 2</u>: Polishing the burr bevel (secondary bevel):

When burnishing a second time, **with a slightly higher burnishing angle**, a certain amount of additional smoothing of the cutting edge is achieved. I apply just a little bit of pressure in order for the bevel to not become unnecessarily deep (cf. base line in Figure 14.5), increasing the grinding effort when sharpening the next time.

---

*[15] The carbide burnisher I use (**Chapter 6.2.1**) can do this. Whether it works as well with regular, coarser ground burnishers, I'm not certain.*

*[16] Without creating an actual **bevel** at the scraper face, restoring the perfect 90° edge in the next sharpening is no issue. Which is different when burnishing both sides of the edge (see **Chapter 7.4.**)*

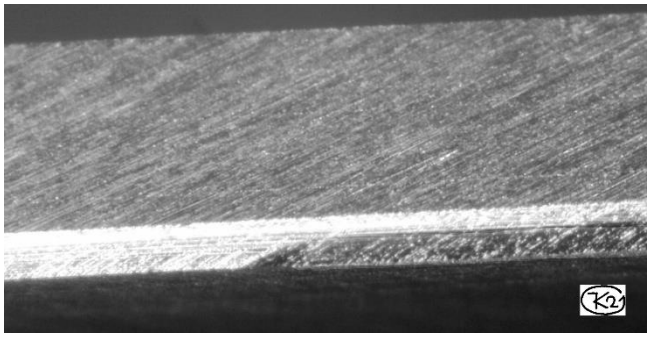

**Figure 16: Primary and secondary burr bevel**

Edge face with primary bevel (10°) along the full width and smaller, secondary bevel (15°), only partially applied here for clarity

I used the guide (**Figure 26**) in this process.

- **Additional effort:** small
- **Result:** I'm not quite sure, I suggest you give it a try.

**<u>Pulling out all the stops</u> – smoothed faces <u>plus</u> secondary bevel:**

Of course these measures can be combined, shouldn't hurt a thing, right? It's possible to achieve very clean shavings like these for example, where the card scraper has been smoothed **and** a secondary bevel added (have to admit, though: birch yields particularly pretty shavings).

**Figure 17: Shaving from an extensively prepared 90° card scraper**

This is what you can get. The shaving has been unrolled.

Wood species: birch

**Card scraper:**

Edge face ground with a 1000 grit bench stone.

Faces honed with a 6000 grit bench stone, then polished with the burnisher

Cutting burr with primary and secondary bevel (10° / 15°).

**Burnisher material**: solid carbide

## 3.3 45° cabinet scraper (supplement)

### 3.3.1 Grinding and honing of the edge before burnishing

I do remove the cutting burr of a 45° scraper blade that has gone blunt completely as well and create a fresh edge by grinding and honing.

I grind the bevel to 1000 grit, the face (the one where the edge will form) with a 6000 grit stone.

### 3.3.2 Forming a new cutting burr

With a 45° edge, the conditions for flattening the burr bevel well are less ideal than with a 90° scraper: The thin edge bends away, high force can not be brought to bear where it is most relevant: towards the cutting edge.

That's why I always go with burnishing twice, i.e. creating a secondary bevel (the process that can improve the quality of a 90° card scraper): The cutting burr is burnished once at λ=15° and additionally at 10° (with reduced force).[17].

### 3.3.3 The result

45° cabinet scraper blades sharpened like this cut very well, the shavings are not curled up as much as we're used to from 90° scrapers.

---

[17] *The order of operation becomes clear from the definition of the burnishing angle, see* ***Figure 12***

# 4 Let's get started: sharpening reality, step by step

**First requirement: Chapter 3 should be known!**

**Second requirement: The card scraper should be in well sharpenable condition!**

A used card scraper that has gone dull is naturally well sharpenable. Brand-new ones are sadly just punched or cut with plate shears without any dressing and need a bit of effort to get them into usable condition. One that has been bumping around is rarely without blemishes. To prepare a card scraper for the actual sharpening process, see **Chapter 5.3.**

## 4.1 Sharpening a rectangular 90° card scraper

("regular quality")

**<u>Step 1</u>: Honing the side faces**

**Figure 18: Removing the cutting burr on the bench stone** (here: 6000 grit)

The blade lies flat on the stone and is guided by it. Fingers press down on the blade towards the cutting edge. After a few passes, finger and thumb move towards the middle and the other end of the blade and press down there. Next on to the second face.

**It's done**, as soon as the abraded edge shows a uniform grinding pattern.

*The notches of this stone prevent the slurry from doing the abrading instead of the stone when doing big surfaces. It's helpful but not strictly necessary.*

**<u>Step 2</u>: Grinding the edge face**

**Either: free hand grinding:**

This is definitely the fastest way, which is why it's what I went back to doing (after using a guide for a while). The unavoidable deviation from exactly 90° needs to be smaller than the burnishing angle (where I use 10°), otherwise no continuous burr bevel can be achieved. It's not a problem for me to do so if I check the 90° angle between blade and stone prior to the last few strokes with the 90° guide (**Chapter 6.3.2**) or a small mirror[18] placed onto the stone.

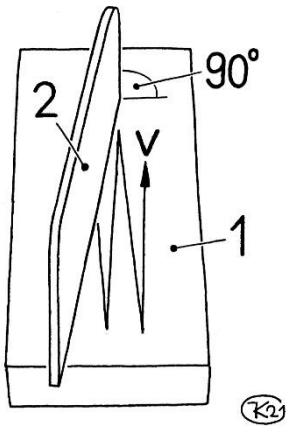


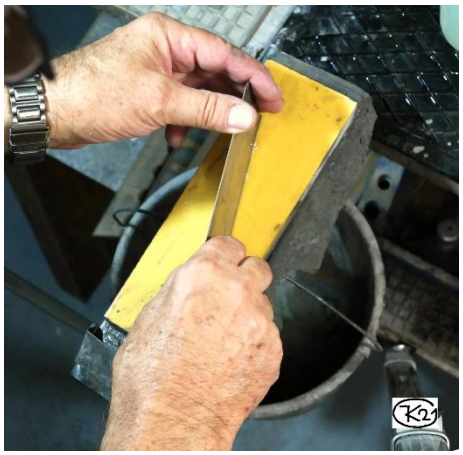

**Figure 19: Free-hand grinding of a 90° card scraper**

1: Bench stone

2: Card scraper

v: Direction of movement

In order to maintain flatness of the stone, the card scraper is moved in a zig-zag pattern along the stone even moving past the edge of the stone.

Moreover, the blade should be at an angle to the direction of movement for better, faster abrasion and to surely prevent roping in the stone (which would result in rounding over the edges of the scraper).

In order to wear the corners all four corners of the stone consistently, the diagonal direction should be switched at least once in the process.

[18] *The mirror is placed in front of one of the perpendicular edges of the scraper. Once the edge and its mirror image align (no bend), the blade sits perpendicular on the stone.*

### Alternative: Using a guide for grinding:

Using a guide (see **Chapter 6.3.2**) the 90° can be maintained exactly. The guide is put PVC face down onto the bench stone and **lightly** pushed down. The card scraper is registered on the perpendicular face of the guide and pushed down **firmly**. If it is a **stone** (which is abraded), don't move the scraper directly in the direction of the edge (to prevent roping which results in rounding over of the blade edges) but at an angle, similarly to the free hand approach. The guide has to move a little bit along at an angle to its long axis while the blade moves along the guide on the stone.

**We are done** (with grinding) once the burnished bevels have been removed completely. This can be inspected with a loupe. If you removed the cutting burr in the first step, you can check with a fingernail (from the face) for the burr (wire edge) that has formed along each edge of the edge face after the burr bevel is removed. By touch is simpler, no need to clean the blade, ensure good lighting and handling a loupe, but it requires some practice. Give it a try!

Finally, to remove the sharpening burr, both faces are briefly honed on a fine stone.

### Step 3: New cutting burrs

To do this, I clamp the card scraper in a vise **and apply a tiny drop of oil** on the edge face with a finger. Then I push or pull the burnisher once over each edge at a 10° angle, that is: once 10° to the left, once to the right. That can be done free hand or using a guide:

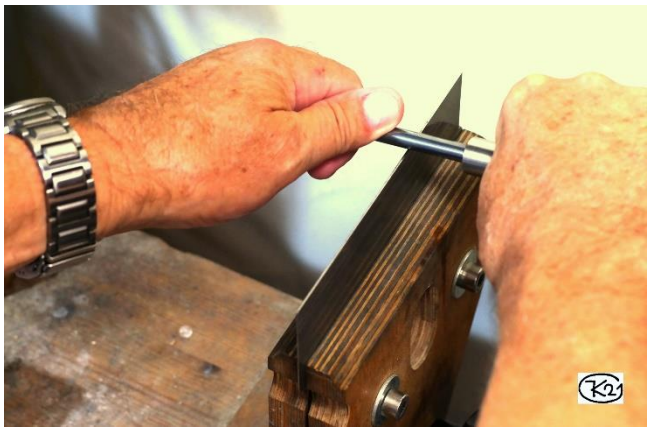

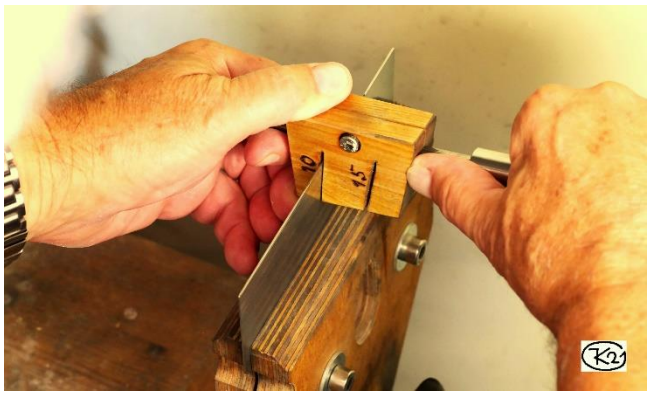

**Figure 20: Forming the cutting burr**

**Top**: free hand, angle by eye

**Bottom**: with guide (which I usually do; more on the guide see **Chapter 6.2.2**)

It's sufficient to push the burnisher lightly onto the edge, at most about as hard as one pushes a sanding block. If you push like crazy, it doesn't improve the scraper but just increases the amount that needs to be ground off next time!
Going once over each edge is sufficient, but twice (at the same angle) probably doesn't hurt anything.

About the option to improve the quality by adding a secondary, higher-angle bevel in a second burnishing step see **Chapter 3.2.6**.

**After burnishing the cutting edge, sharpening the card scraper is completed and it is ready to use.**

## 4.2 Sharpening a 90° card scraper with convex cutting edge

It's basically the same process as with a regular card scraper, only that guiding the edge face during grinding and when burnishing is a bit more difficult.

### Step 1: Honing the faces

Just like with regular scraper blades.

### Step 2: Grinding the edge face

**Free-hand:**
To get a continuous round edge that's perfectly square to the faces (free hand on the bench stone) does take a lot of effort.

**Figure 21: free hand grinding of a convex edge face (Example)**

Thumb and index finger of the right hand grip the blade. It's held perpendicular to the stone (as shown in **Figure 21**) and pulled and pushed back and forth while simultaneously rocking the blade with a wrist motion.

Thumb of the left hand pushes the blade firmly on the stone for decent abrasion. That way the whole edge face is treated.

To prevent roping: move around on the stone!

Grinding like this is fairly simple, if the blade is not too long and can therefore be held well and if the curve of the edge is **not** too pronounced (e.g. 180°). The scraper in this and the next image is a new one, optimized for good grinding and honing properties. It's 100 mm (4") long, about 30 mm (1 3/16") wide and a bit 1 mm (~1/32") thick (**Figure 2, left**, scraper blade below).

### Using a guide:

The blade has to be swiveled along the edge while it's being held to the face (masked with insulating tape) of the guide.

To prevent roping, guide and blade are continuously moved over the surface of the stone.

Finally: the sharpening burr is removed by once more honing the faces briefly.

**<u>Step 3:</u> Forming the cutting burr**

**Figure 22: Forming the cutting burr on a small scraper with a convex edge.**

I use the angled guide (see **Figure 27**).

The burnisher has the angle guide attached to it and sticks in a hole of a block of wood.

The scraper blade is pushed onto the angled surface of the guide and against the burnisher, it's then swiveled along it. This works well if the blade is long enough (this one is 100 mm or 4").

## 4.3 90°- card scraper with concave cutting edge

I avoid them for a long time now, since grinding and honing of the edge face is laborious and difficult. I used rounded edges of bench stones as well as wet&dry sandpaper around a dowel… A cylindrical grinding pin on a drill is an option, it still is cumbersome.

Working the faces and forming the cutting burr (like in **Figure 23**) is still no problem with this kind of scraper.

## 4.4 Sharpening of a 45° scraper blade

**<u>Step 1:</u> Honing the face**

There is no difference from the process for a 90° card scraper, see **Figure 18**.

**<u>Step 2:</u> Reshaping the 45° bevel on the bench stone**

For the function of the scraper, the specific angle is fairly unimportant, but I try to match the angle from the last sharpening in order not to have to remove as much material.

To grind and hone such blades – likewise with plane blades – I use a holder and angle gauge.

I grind until the bevel surface shows a homogenous abrasion pattern. Every trace of the previous burr bevel needs to be gone.

**Figure 23: Free hand grinding of a 45° scraper blade with a holder**

This is only a picture of the process.

A more detailed description can be looked up in the instructions for sharpening chisels and plane blades (see link on first page).

Finally, to remove the inevitable grinding burr, the face is pulled over the honing stone once.

**<u>Step 3:</u> Forming the cutting burr**

On 45° blades, I **always** burnish the scraper blade **twice** (see **Chapter 3.3.2**).

The guide shown in **Figure 26** is well suited for this.

**Firstly:** burnishing at 15° with “regular” pressure.

**Secondly:** burnishing at 10° with lighter pressure.

**Attention!** While burnishing a 90° card scraper deforms a square edge a little, in this instance, we have a very sharp cutting edge that is being bent. **Don’t slip, there is a significant hazard of serious injury!!**

**<u>After burnishing the scraper, it is sharp and ready to use.</u>**

# 5 Making and/or furbishing card scraper blades

It's fairly simple to make a card scraper. It's especially practical if special shapes are required – small ones, various radii and similar. Those are cut from a sheet of suitable steel. But that's not all, to get a regularly sharpenable scraper, faces and edge faces need to be ground flat and square. The blade needs to be prepared. The same applies to blades freshly bought in most cases. Sometimes they take extra effort.

## 5.1 Cutting and shaping

The material is "spring band steel" (see **Chapter 7.2**). If you buy a piece of band steel, it's worth it (saves effort) to get precision ground thickness gauge strips. You can also cut bigger scrapers into half or repurpose plates of old (re-sharpenable) saws.

Keep in mind not to make the blades too small, a bigger one is in most cases easier to handle – also during grinding – than a small one. A bad example is shown in **Figure 2**, left: the smallest blade is way too short, I wouldn't do it like this again.

One problem can be to **cut** the steel band without deforming or damaging it. Sheet metal shears are not well suited, since they deform the edges significantly. Decent guillotine shears are better, but still requires some remedial work, more so the worse the shears are. Dry cutting with an angle grinder results in thermally damaged edges ruining the temper and is therefore unfeasible. I don't get any damage and minimal deformation by clamping the steel to a piece of hardwood and cutting both with a saw. The metal saw blade is guided at a shallow angle relative to the workpiece in order for it to not hook into the steel. It should be of good quality, you will not get far using a bad one.

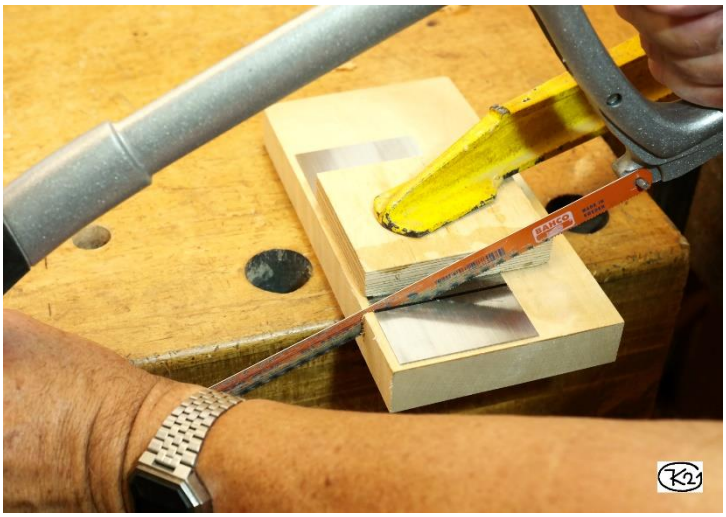

**Figure 24: Sawing a sheet of spring steel (here: cutting a card scraper)**

In this manner, I can cut smaller blades. The one I cut here is too short. I prefer to use C75S (1.1248) spring steel band, 1 mm (40 thou) thick, 30 mm (~1 3/16") wide. I have a long strip I can just cut a piece off of which is handy and labor-saving.

The **edges** of a blade cut this way are rough and have a burr. It can be smoothed with a file or a grinder. Make sure to take it easy on the latter: a single pass along the stone, then into the water for cooling (water bin right next to the grinder).

If a card scraper should get a rounded cutting edge, this can be done with a file or the bench grinder, at least if it's convex (see examples in **Figure 2**). Concave ones can be filed or ground with a grinding pin in a drill or Dremel – if possible they are to be avoided, since they are problematic to sharpen at best (convex wooden parts can usually be worked with a straight scraper as well).

## 5.2 Improved handling, drilling a hole

I round over the side I hold the scraper at (see **Figure 2**) with a file, sandpaper and a grinding brush in a drill).

It can be desirable to drill a hole into the scraper – be it to gently hang it, be it to improve handling for grinding, honing or burnishing (with a big hole towards the cutting edge).

Spring steel is difficult to drill due to its hardness. It helps if the drill is guided. I use a drill press for this, a regular drill in a drill stand works equally well.

The problem of drilling into borderline hard steel is that the dead center of the twist bit can not cut but has to forcefully dig into the material. To drill into solid steel, it's recommended to start with a small diameter bit (which has a shorter dead center) or one that has been pointed. Only then a bigger drill bit is used to open up the bore.

Nevertheless common HSS drill bits are overstrained by spring steel and have to be resharpened after drilling only a few holes. To pre-drill, I got myself an inexpensive 3.5 mm (1/8") solid carbide drill bit which works much better. To bore up the hole to 8 mm (5/16") I reground a common masonry drill so as to have a one-sided bevel and sharp cutting edges instead of the original roof-shaped carbide plates. Using the "rug trick"[19] I get perfectly round holes. To de-burr, use an equivalent 12 mm (1/2") bit (the countersunk edges are visible in **Figure 33**).

## 5.3 Preparing 90° card scrapers for grinding (45° analogously)

The scraper blade is ready for grinding, once the edge faces (that will have the burr bevel formed with the burnisher) are equally square and sharp-edged along their whole length. This state is achieved by grinding the faces and edge faces. A 1000 grit stone (or similar) is sufficient, finer stones are used in the actual sharpening process.

**The edge face** can always be brought into an orderly condition by grinding it on the bench stone or if necessary filing it first, then proceeding with the sharpening process.

**The faces** can cause issues. Any deformations that prevent it from fully and evenly registering on the stone are problematic. The stone is used to check: grind the face along the edge as shown in **Figure 18**, blade flat on the stone, pressure towards the edge. The stone needs to be flat and clean (no slurry). Ideally you get a strip of very(!) consistent grinding pattern up to the very edge.

Often that is not the case, there are irregularities, parts of the surface do not touch the stone at all or not correctly (weak abrasion pattern not from the stone but loose particles floating on top of it). This can be due to different causes:

- The face is not straight and flat but bent from the cutting process. That can be subtle or very obvious, typically there is a convex (opposed by concave on the other side) area parallel to the edge, that's only visible after grinding the face. Botched production. And it means lots of grinding effort; it helps to grumble about the manufacturer ☺. Very small remaining imperfections along the edge can be not as critical, since starting with the second sharpening, not the face is going to form one side of the edge, but the abraded remnant of the cutting burr (see **Chapter 3.2.2**: "Treatment of the edge area of the scraper face").
- The cut (but not ground[20]) plate edge of a brand new card scraper always has a little bit of round-over (rollover) on one side and a small protruding burr on the other. With bad processing, this can be pronounced and annoying. A significant round-over cannot be solved just by grinding the face. Instead, the edge face needs to be ground down with a file until the rounded section is removed, only then can it be further sharpened.
- Typically for old "gems": the scraper is bent or kinked or deformed in some other manner. It's hard to straighten that out, it springs back to its old shape obstinately ("spring" steel!). A bent blade can be straightened carefully by bending it by hand or with a hammer on a hard, wooden surface. Kinks can technically be removed with a hammer on a (good, very planar) anvil or substitute thereof. Take care not to whack any more dents into the plate

As soon as a sufficiently uniform abrasion pattern is achieved on face and edge face, the blade can be sharpened (as described in **Chapter 4**).

If cleaning up any dings, pitting and such with a reasonable amount of effort: dump it! Sometimes it's worth to cut up a big blade into smaller, still usable ones.

---

[19] *A folded piece of fabric is put on the predrilled hole before drilling. The fabric squeezes into the chip flutes of the drill bit and helps to track it in the smaller, existing bore; the new hole does indeed get round reliably.*

[20] *Really well made card scrapers will have ground and sharpened edges straight as a ruler. I once got a set by Veritas like that. It's not common, though.*

# 6 Things you need: Tools and utilities for sharpening

## 6.1 For grinding and honing

If you're set up for sharpening chisels and plane blades with bench stones and finer stones for honing (which are actually kept planar) or diamond plates (which stay flat), you're already mostly set for sharpening card scrapers.

Extensive information on sharpening equipment can be found in my instruction on sharpening chisels and plane blades (see link on page 2). Therefore only two notes at this point:

- When I mention a grit number for stones (e.g. 1000) I refer to the generally prevalent standard JIS which is used by most manufacturers and vendors.
- A very close approximation to planar is really important for sharpening tools. Without it, everything is so much more troublesome.

## 6.2 For burnishing: burnishers and more

### 6.2.1 Burnishers

The final burr bevel should be flat. Therefore the burnisher needs to be finely ground, ideally polished. And it needs to be harder than the scraper; this fact and a hint of oil prevent scuffing (roughening of the gliding surfaces) when burnishing.

Common burnishers are made from hardened steel, usually cylindrical, diameter around 8 mm (5/16")[21] with a handle. Some are ground coarsely with noticeable, sharp grinding marks. It makes one wonder: does it just form the edge or will it maybe even grind off shavings[22]?

The ideal requirements **"fine surface finish and very hard"** are fulfilled best in a finely ground carbide rod. This it not hardened steel but a sintered, high performance cutting material made from tungsten carbide, cobalt and other exotic additives and is also known as "solid carbide"[23].

**Figure 25: My solid carbide burnisher**

Solid carbide rod, 8 mm (5/16") diameter, 150 mm (6") long and glued into a file handle. Costs about as much as a hardened steel one with a handle off the shelf, but is significantly better.

### 6.2.2 Angle guide for cylindrical burnishers

You can burnish free hand, but I prefer to use a guide that ensures a constant burnishing angle. It's easy to make. All guides shown here don't allow a slicing motion, it's a single point of the burnisher that glides along the edge of the scraper.


**Figure 26: 10° / 15° guide with slots**
The burnisher is fixed in a block of hardwood with slots sawn at an angle.
The block is also slotted along the bore for the burnisher and can be clamped with a screw.

---

[21] *There are also triangular ones. I tried those, but I prefer the round ones. 8 mm (5/16") is a good size, but it's not particularly critical.*

[22] *Such "burnishing with chip removal", possibly combined with a gliding motion of the burnisher (along its long axis) might explain SEM images that can be found online showing cutting burrs that don't match with my observations:*
*https://scienceofsharp.com/2019/06/08/what-does-steeling-do-part-2-the-card-scraper/*

[23] *Solid carbide. These are blanks for making drill and milling tools, also recognizable by the precise diameter (tolerance h6). The shank of a solid carbide router bit works as well, but is often too short.*


**Figure 27: Another guide** (10° and 15°, e.g. for smaller specially shaped card scrapers)

This is just a small block of hardwood that has an 8 mm (5/16”) hole to stick it onto the burnisher (happens to sit tight enough not to need additional fastening). The two angled surfaces are 100° respectively 105° relative to the hole. The blade is registered against this surface and pressed against the burnisher to form the cutting burr (see **Figure 22**).

The recess between the registration surfaces prevents damage to the opposite cutting burr when burnishing the other edge.

### 6.2.3 Devices for burnishing

combine the burnisher with a guide to maintain the burnishing angle.

**Figure 28: Veritas burnisher**

Veritas offers this tool. There’s a small solid carbide pin whose angularity can be adjusted between 0° and 15°

Suited only for one-sided burnishing (like I do).

It’s a bit large and made from plastic, but it works well for the regular big card scraper blades.

**Figure 29: Ulmia card scraper burnisher (“Ziehklingengratzieher”)**

Here, an outside torus shaped, round and hardened steel disk forms the cutting burr. It doesn’t move and behaves therefore like a cylindrical rod. Why a disk? Once the working part shows wear (this is not carbide), the disk is turned a little.

Obviously intended for one-sided burnishing (like I do).

A wooden, clunky thing that nevertheless works okay for big 90° card scrapers. The angularity is about 15° and not adjustable.

It’s still being made and sold. Innovation is something else, though. At least the calorific value is considerable ☺.

## 6.3 Additional useful equipment

### 6.3.1 Vise

A vise is useful and reduces the quite realistic risk of injury by securely clamping the scraper for burnishing it. That can of course be done in the face vise, but it might be occupied. Therefore I have mounted a small shop-made vise at my sharpening station where I also sharpen card scrapers.

**Figure 30: Vice for card scrapers**

The jaws are 150 mm (6”) wide, a small scraper is currently secured.

Made from two pieces of 19 mm (¾”) baltic birch ply. To the left (back) the fixed jaw, right (front) the moving one. Two M8 hexagon socket screws at the same height are screwed into threaded inserts in the fixed jaw. By drilling the holes in the moving jaw bigger, the clearance results in the screws acting as a hinge and determine the distance between the jaws. Clamping is done by an M8 threaded rod with the black star grip. It screws into a steel tee nut insert in the moving jaw, pushing on a metal plate set in the fixed jaw.

### 6.3.2 Angle guide for square grinding and honing

If you struggle with keeping a sufficiently square angle when grinding the edge face, a guide like this can be used. It ensures (used towards the end of the grinding process) even burr bevels. It’s also useful when the edge face is to be honed afterwards (again using the guide). I used it for a while, but went back to free hand grinding, partially because I stopped honing the edge face.

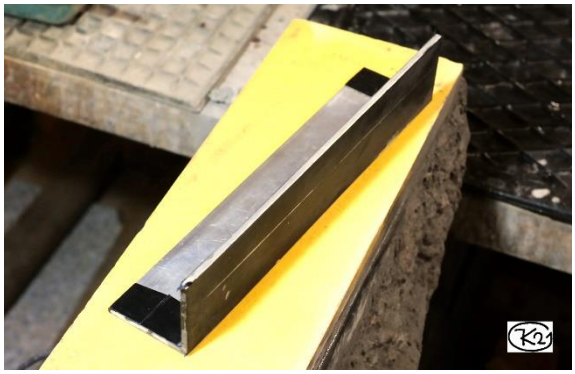

**Figure 31: Angle guide for square grinding and honing**

This is just a 150 mm (6”) long piece of off-the-shelf, aluminum angle profile, 30 x 30 mm (~1 3/16“)[24].

The guide needs to glide on the stone and the blade along the guide when grinding and honing. To achieve this, one or both outside faces of the profile are taped with two strips of PVC isolating tape. It doesn’t last long, but it’s easy to renew. About its use, see **Chapter 4.1.**

### 6.3.3 A good loupe (and maybe a bit more)

A loupe is virtually indispensable for the quality conscious sharpener, especially for novices. First and foremost, it allows you to check and compare the state before and after grinding/honing. Secondly: to determine whether faces and edge face are prepared correctly, i.e. ready for burnishing, or whether further grinding/honing is required. After burnishing: Are the burr bevels consistent? Or are they not, e.g. because of too much deviation from 90° during grinding?

Granny’s big reading loupe with low magnification is not what we need here, but a strong loupe (whose diameter is small because of physical restrictions). 10X magnification is good, a bit more doesn’t hurt. Folding loupes are common, another option is a watchmakers loupe that can be pinched with the eye. For our purposes, a simple quality loupe (typically a single thick framed lens) is sufficient. My folding loupe at the sharpening station is 10x magnifying, costs about 10 bucks and does a good job.

---

[24] *I prefer the angle guide as being more convenient (better to keep flat on the stone) than a wooden square piece, but that will of course work, too.*

**Figure 32: Using a strong folding loupe** (to inspect a card scraper)

The loupe is held close to the eye, then the object close to the loupe.

*Practiced loupe users scan the depth by varying the distance to the object. They also optimize lighting and avoid reflexion on metal objects by advantageously placing loupe and object in relation to the light source. A light integrated into the loupe doesn't allow for that. Nor is it necessary and I believe it doesn't help.*

If you want to see more than a loupe offers, a microscope is required. It doesn't replace the loupe at the sharpening station, due to more involved handling. It's not necessary just for good sharpening, but some people are naturally curious… To inspect cutting edges and burrs visually, I got a tiny – suitable for the workshop – pen microscope with 100x magnification, vertical image and scale[25]. Very nice, if a bit pricey. Requires a steady hand and practice.

Of late, I have at my disposal a quite usable and still surprisingly low-priced digital microscope[26] (that I used to take the micro images of cutting edges in this document). It's really not necessary for sharpening. It has a lot of toy value, but it's not easy to take presentable images of cutting edges and similar objects. It doesn't achieve the level of resolution my pen microscope does either.

[25] *Peak 2050*

[26] *Hayear HY 1080*

# 7 Any questions? FAQs

## 7.1 What can card scrapers be used for?

I'll just list what I use them for. For your information: I have and use a number of planes, but no machines to sand wood, I don't want any. I do use sandpaper, but rarely and when I do, I use a cork sanding block or glue it up back to back as hand sanding pads.

I use scrapers for:

- Smoothing wooden surfaces that are too small or hard to reach with a smoothing plane or that have grain changing its direction which makes planing without tear-out very difficult.
- Smoothing laminated (butcher block) boards and baltic birch plywood. These are terribly rough ground and even bumpy. Smoothing them with a plane doesn't work well since the plane tries to take off any unevenness (though some of that isn't really bothersome). To get to a clean surface, a lot has to be removed. A hand held card scraper follows the surface, smoothing it – provided it's well sharpened – much better than a sanding block and with less dust.
- Stripping wooden table tops and similar pieces after long use (meaning a thin surface layer is removed with scraper or card scraper, not a fine smoothing). That can even be done in the living room, which is not recommended with a sanding machine. Additionally, sandpaper clogs quickly when used on oiled or waxed wood. Here, too, the hand held card scraper shines and often works better than the scraping plane, since it follows minor unevenness that doesn't hurt anything.
- Removing lacquer from stair treads, furniture pieces and objects like tool handles. Removing glue residue. Works so much better and gentler than using sandpaper. A card scraper can reach the corners, too! You can work across the grain with a sharp card scraper if you go diagonal.
- Cleaning the surface of a workbench or work table (very lightly, without really removing the finish and with a 1 mm (~1/32") scraper blade) to remove glue drops and other dirt that would otherwise leave shabby marks on soft wood parts.
- As a scraping chisel (see **Chapter 7.3**): to perform small, localized corrections to improve the fit of joints and similar.
- Smoothing carved spoons and other hardwood kitchen utensils, e.g.:

**Figure 33: Bowl of a cooking spoon, smoothed with a card scraper**

(Carved with a bent gouge, then leveled and smoothed with the scraper).

Wood species: pear, steamed

Card scraper: **Figure 2**, bottom left (here before I added a second hole)

## 7.2 Which steel is suited for card scrapers?

Card scrapers are made from sheet steel of medium hardness. Medium hardness means: it can still be filed. Suitable, commercially available material is tempered spring band steel, often called "hardened" which means the same. The band is rolled and ground.

**"spring"** means: It's the same material technical leaf springs are made from.

**"band"** means: It's manufactured as a long strip that is rolled to a coil.

Tempered spring band steel is available as carbon steel (e.g. C75S/1.1249 or C100S/1.1274) or stainless. I've only used carbon steels and don't expect stainless to be any better regarding sharpenability and cutting edge retention, more likely the opposite[27].

Re-sharpenable saw plates are made from tempered spring band steel. With saws, this is often called hardened, again the same. It indicates the whole plate is hardened consistently, not just the teeth. These saw plates can be repurposed for card scrapers. The plates from saws whose teeth are impulse hardened however may be too soft to use as a scraper, but if in doubt, give it a try.

## 7.3 Is it possible to create a cutting burr on hard blades and is it useful?

Functional plane blades and chisels are considerably harder than card scrapers. It's still possible to form a cutting burr (at least with a solid carbide burnisher). With European steel, i.e. not extremely hard, I haven't experienced any chipping or the like. It might be different with Japanese steel, which is typically quite a bit harder.

**Adding a cutting burr to a plane blade**, in order to use it as a scraper would therefore be possible. The blade would likely need to get a slight camber, since it wouldn't flex like a thin card scraper. This sharpening effort would just be too much, though.

**Chisels with cutting burr** (bevel ground at 45° or 40°, burnishing angle 10° or 15° (cf. **Figure 11**) however are actually **interesting and useful tools:**

- I repurposed two old chisels, 12 mm (½") and 19 mm (¾") into "**pull (scraping) chisels"** which I use for small dressing work, especially for mortise and tenons. I know of no other tool that does the job as well and fast, especially if used skewed. The chisels have a straight cutting edge, 40° primary, 45° secondary bevel and polished mirror side. The cutting burr is burnished at 10°. Extremely sharp and perfect to use! Such a blade (and a kindred one with a cambered edge) also serves very well to finely turn pieces at the treadle lathe without tear-out (useful to counter the low cutting speed at the manual lathe, as well as my lamentable low turning skills).
- And then another, 8 mm (5/16") wide, mounted in a file handle, bevel and mirror side ground only, 35° bevel, burnished at 10° and again forcefully at 0°. That really does have a hook shaped cutting burr. Very helpful to clean out the bottom of a mortise.

## 7.4 What does "two-sided burnishing" (regarding 90° card scrapers) mean?

To form a new burr bevel at the edge, there are two prevalent methods:

- **One-sided burnishing:** That is the way I do it and how it is explained in this document (**Chapter 2.1**): the burnisher is tilted slightly (by the burnishing angle) towards the face, moved along the edge and pushed against it. Done.
- **Two-sided burnishing:** This is the traditional method, surely not bad, indispensable in older text books for the cabinet maker and joiner, e.g. this one from 1950 (made available by Wolfgang Jordan whom I'm grateful for that):
  https://www.holzwerken.de/techniken/ziehklingen.phtml

  In my own words: The first step is to push a burr towards the edge face with the burnisher (which is held at a very shallow angle to the face). Then the final cutting burr is pushed towards the face like is done in the one-sided process. A blunt cutting burr can supposedly be refreshed, even multiple times, just with the burnisher.

  This method is widely shown on the internet. I have promoted a similar one years ago in the old version of this instruction. By now I have a different opinion, which is: it's better to completely restore a new, precise and perfectly burr-free 90° edge prior to every burnishing. It's fast and you always get the same, consistent sharpening result. That's much better than somehow trying to realign a blunt cutting burr. A bevel on the face is highly questionable. It significantly impedes restoring the burr-free 90° edge, since it's no longer enough to just grind the face flush on the bench stone (see **Chapter 3.2**).

---

[27] *Anyone who experiences problems with rust due to sweaty hands may want to look into stainless card scrapers as a possible solution.*

## 7.5 Why are there thinner and thicker card scrapers?

The big, common, rectangular card scrapers are held in a manner so that they bend slightly – e.g. by pushing the blade with both hands, thumbs towards the middle. This results in a shaving that's thicker towards the middle, preventing the scraper edges from digging into the wood.

When using scrapers for very fine work with very thin shavings the cutting forces are small; in order for the blade to still bend sufficiently, they should be fairly thin. The thinnest scraper I use is only about 0.4 mm (16 thou) thick and much too thin for the – not very intricate – woodworking that I do. I usually use 0.6 mm (24 thou) or 0.8 mm (32 thou, 1/32") thick blades. A very thick card scraper feels stiff, even the one 1 mm (40 thou) scraper I own already feels that way to me. Card scrapers with a curved cutting edge (e.g. for scraping spoon bowls) do not need to bend and can therefore be a bit thicker – the practical limit is reached, once grinding the wider edge face gets arduous. For these purposes, 0.8 mm – 1 mm (1/32" to 40 thou) seem to be a good thickness.

## 7.6 Why not scraping without a cutting burr?

In **Chapter 2.1** we saw that a 90° card scraper is nothing more than a burr-less scraper. And there are other tools that can be used with or without one. A scraper with a cutting burr – according to my limited experience – will result in a better surface quality than one without a burr. Undeniably, there are applications, where this quality is irrelevant, e.g. when removing old paint.

I only use card scrapers with cutting burrs. The reason being mostly easier and faster sharpening.

**The ground bevel of a scraper** needs to have an acute angle, because getting a sharp edge at 90° is not achievable at a bench stone[28], at least not for me. I sharpen by hand. For a 45° edge in good quality (ground and honed) I need a handhold and an angle guide (see **Chapter 4.4**) and a few minutes. Once done, I have **a single** burr-less scraper cutting edge.

Card scrapers with a burr work with 90° edges (that will have a cutting burr burnished). I do that free hand on the bench stone with subsequent burnishing in much less time than a 45° edge takes. And I get **two** cutting edges.

Even if I would sharpen and resharpen a 45° cutting bevel with a machine quickly, I wouldn't forego burnishing afterwards. It takes only about 10 seconds and results in a superior tool.

## 7.7 Is there a video of this sharpening method?

A video of me and this method? No. There's an older video I did with Dirk Böhmer:

**https://www.youtube.com/watch?v=1QZfDVKX7Io**

It's not up to par with the current skill and insight. Therefore: feel free to watch, but please still read this instruction, it's much better!

# 8 In conclusion

I thank you, the reader, for your time and attention that you bestowed on my efforts.

I hope by writing these sharpening instructions I can make a contribution towards hand tools and their use being appreciated as is their due and used more widely. As well as a small but meaningful step towards more sustainability.

I wish all of you success and joy using your tools and also sharpening them, because that's part of it.

Friedrich Kollenrott

---

[28] *I'm convinced a perfect, finely honed 90° edge without any round-over would make a good scraper, after all, a card scraper can do that as well – at 90°.*